www.oriel-lighting.com.au

BRIDGE 6 BLACK AND BRASS

SKU:OL56013/6SB

The Bridge.6 Pendant light features six GU10 spotlights, the direction of these spotlights can be individually adjusted. Suitable for installation on a flat or sloped ceiling, the 180cm cord suspension allows for simple height adjustment during installation. The front of the spot-head is removeable for easier GU10 globe replacement, supplied without globes, allowing the end user to select the most appropriate light source for their application.

Additional information

Shipping Weight	3.1 kg
Shipping Carton Dimensions	15.0 × 23.0 × 93.0 cm
Brand	Oriel Lighting
Supplier Code	OL56013/6SB
Colour	SATIN BRASS
Globe Qty	6
Globe Type	GU10
Max. Wattage	35w
Globe Included	NO
Recommended Globe	A-LED-875540
Voltage	240V
Overall Height	177
Overall Width	90
Overall Depth	19
Fitting Canopy	L50 H3 W5
Fitting Suspension	165
Fitting Other Dimension	Spot L9 D6
UPI	9324879225298
Electrician To Install	This fitting should be installed by a licenced electrician
Warranty / Guarantee	12 Month Replacement Guarantee

Images

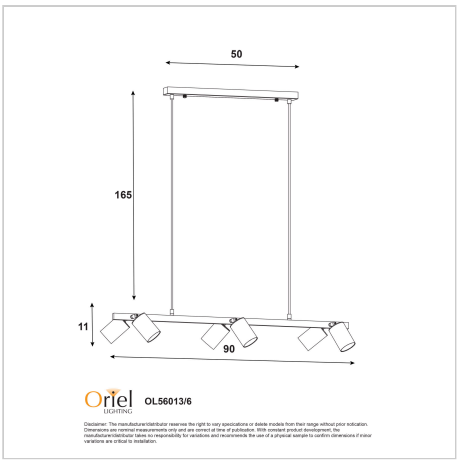

Unless stated, fittings do not include globes (bulbs). No representations are made as to the suitability of this product for your application. All fixed lights (other than DIY lights) should be installed by a licensed electrical contractor. Due to continuing product development, some specifications may change over time. Refer to our detailed Terms and Conditions, online at: www.oriel-lighting.com.au | Details and specifications are current at the time of printing, and with constant product development, subject to change.

(c) Oriel Lighting