www.oriel-lighting.com.au

DRAM WALL LIGHT CLEAR

SKU:OL69491CL

Add a touch of sophistication and vintage appeal with the DRAM wall light. The subtle styling of the diamond pattern glass and satin black metalware makes it well suited to many applications. Recommended for use with a filament globe (available separately).

Additional information

Shipping Weight	1.2 kg
Shipping Carton Dimensions	17.0 × 18.0 × 29.0 cm
Brand	Oriel Lighting
Supplier Code	OL69491CL
Colour	Clear
Globe Qty	1
Globe Type	E27
Max. Wattage	60W
Globe Included	NO
Recommended Globe	A-LED-21104227
Indoor / Outdoor / Alfresco	Indoor
Overall Height	23
Overall Width	14
Overall Depth	18
Fitting Backplate	D12 P3
Glass/Diffuser Material	Clear Glass
Fitting Glass	H13 TD8 BD14
UPI	9324879227568
In The Box	1 x glass + 1 x bracket
Warranty / Guarantee	12 Month Replacement Guarantee

Images

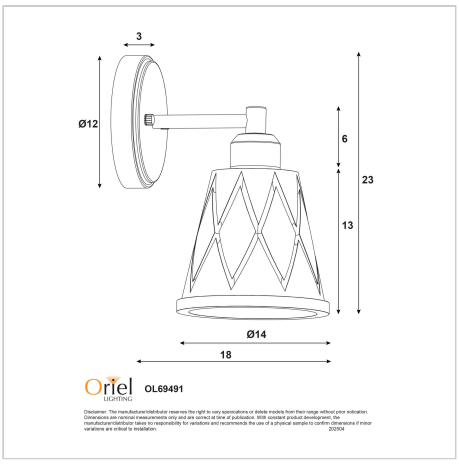

Unless stated, fittings do not include globes (bulbs). No representations are made as to the suitability of this product for your application. All fixed lights (other than DIY lights) should be installed by a licensed electrical contractor. Due to continuing product development, some specifications may change over time. Refer to our detailed Terms and Conditions, online at: www.oriel-lighting.com.au | Details and specifications are current at the time of printing, and with constant product development, subject to change.

(c) Oriel Lighting